KH (R-PSFM-T5) **PLASTIC FLANGE-MOUNT**

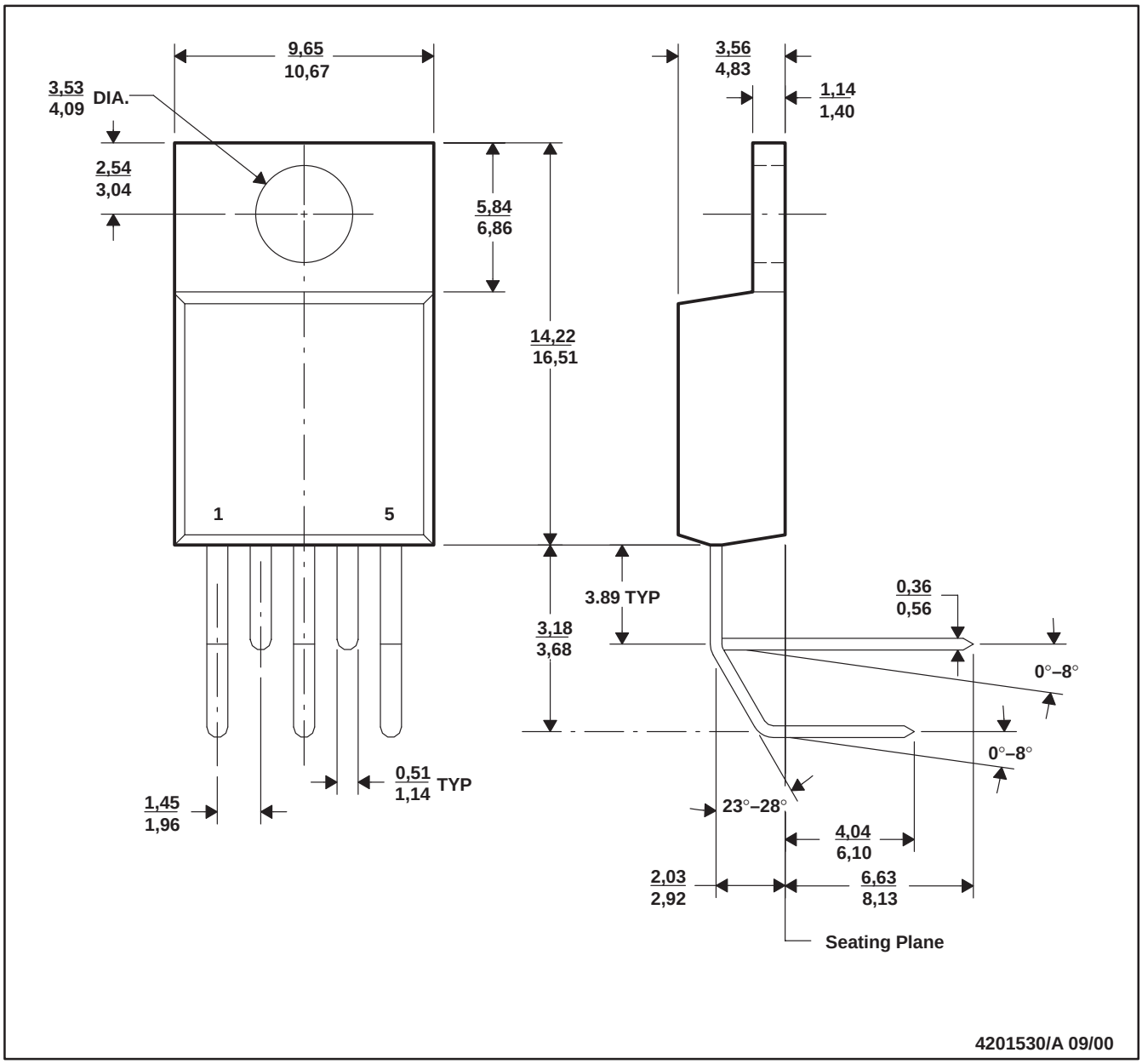

NOTES: A. All linear dimensions are in millimeters.
B. This drawing is subject to change without notice.
C. Dimensions do not include mold protrusions, not to exceed 0,15.