High-Efficiency, Regulated Charge Pumps for High-Current Applications

By Brigitte Kormann, Dipl.-Ing.

ABSTRACT

Charge pumps are well known as voltage doublers or inverters for very low power applications, e.g. below 50mA of output current. For applications where the input voltage could vary - as in battery powered systems - the charge pump was not an acceptable solution, until now. The minimum additional requirement was a linear regulator for stabilizing the output voltage. Newer charge pumps are regulated internally and can deliver substantially higher output currents. This way charge pumps are becoming more viable in applications that have been the domain of inductive DC/DC converter. This topic will give an overview on which topologies are used, how charge pumps are regulated and how external capacitors influence the performance of the system. Application examples show several possibilities to increase the performance by using additional external parts.

I. CHARGE PUMP TOPOLOGIES

One of the best-known topologies is the voltage doubler. Fig. 1 shows the basic switch configuration and the necessary capacitors for a voltage doubler charge pump.

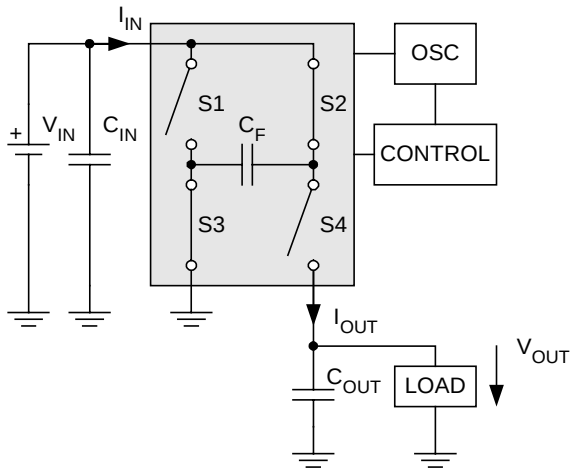

Fig. 1. Voltage doubler charge pump.

The operation of a charge pump can be divided into two phases: In Phase 1, also called charge phase, the switches S2 and S3 are closed and the flying capacitor C_F is ideally charged to V_{IN}. During this time, the output capacitor C_{OUT} supplies the load and is therefore being discharged.

In Phase 2, also called transfer phase, the switches S1 and S4 are closed and the flying capacitor C_F is placed in series to the input voltage. These two voltage sources charge the output capacitor C_{OUT} and supply the load. Phases 1 and 2 have a duty cycle of 50%, i.e. both have the same duration, Δt.

To transfer energy from the input to the output, the phases are periodically repeated with a frequency of several hundred kiloHertz. A control circuitry and an oscillator control the operation of the charge pump.

The output voltage ripple depends on the time of the charge phase and on the capacitor size and its ESR. During the charge phase the output capacitor C_{OUT} supplies the load and is therefore being discharged. The longer the charge phase, the more charge is removed from the capacitor. The ESR of the output capacitor has an influence due to the fact that current through the capacitor is reversed every cycle — during the charge cycle current flows out of the output capacitor, and during the transfer cycle charge flows into the capacitor. The output voltage ripple can now be reduced by reducing either the charge time, i.e. increasing the switching frequency, or by reducing the ESR or by increasing the size of the output capacitor. All three possibilities have their boundary: ESR is present in every capacitor, C_{OUT} is normally limited due to board space and

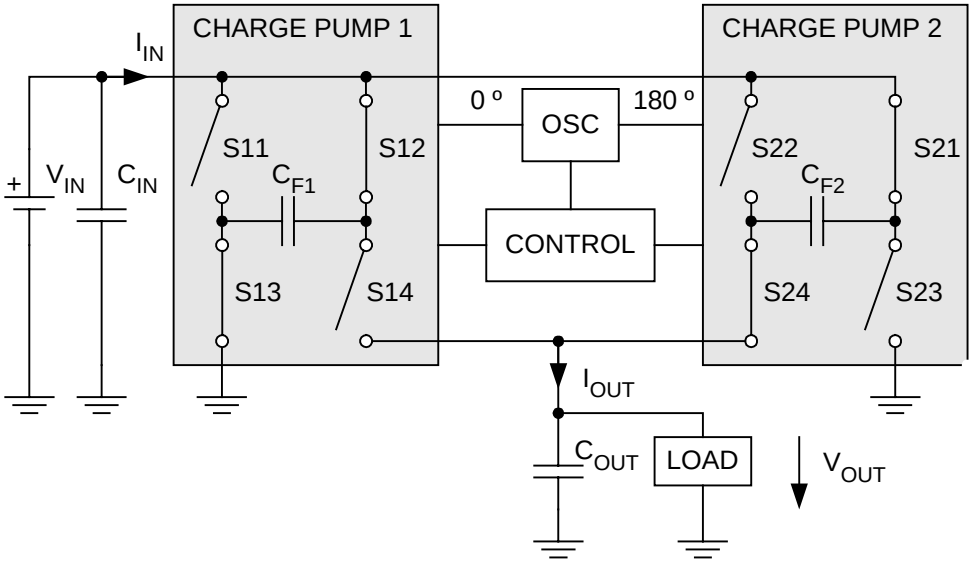

Fig. 2. Push-pull voltage doubler.

.

cost and the frequency is fixed by the design of the control circuit.

For further reduction of the output voltage ripple, a new topology was invented: the push-pull charge pump. Fig. 2 shows the basic circuitry of such a charge pump.

In this topology, two charge pumps are used instead of one. These two charge pumps operate 180º phase shifted. While charge pump 1 is in charge phase, charge pump 2 is in transfer phase, and vice versa. The output is therefore continuously supplied from the input, thus reducing the ripple to a minimum (e.g. 5mV p-p for TPS60100), resulting in only a small spike that occurs during the turnover from one transferring charge pump to the other.

In Fig. 3, the difference in output voltage ripple of a single-ended charge pump to a push-pull version can be seen. The measurements are made with the TPS60100 in both configurations with the same ceramic capacitors:

- C_{IN} = 10µF
- C_{Fx} = 2.2µF
- C_{OUT} = 22µF + 1µF

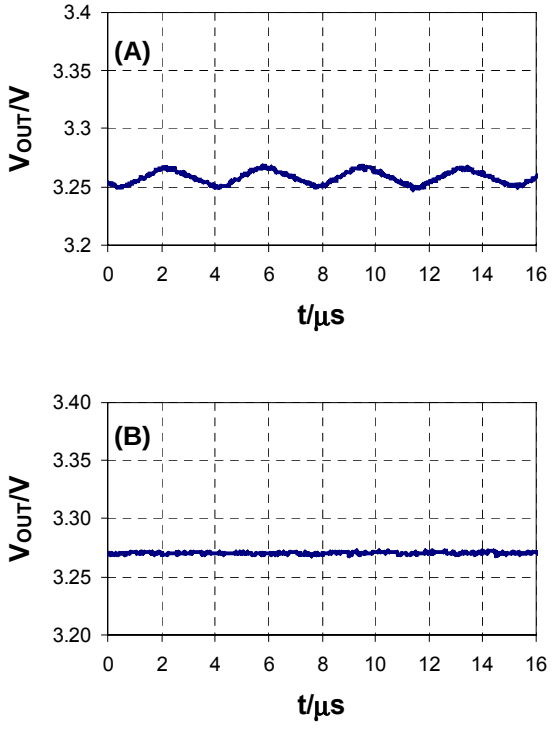

Fig. 3. Output voltage ripple comparison between (A) single-ended and (B) push-pull charge pump.

In a voltage tripler, the two phases of a charge pump can also be observed. During Phase 1 (charge phase) the switches S2, S5, S3 and S6 are closed and the two flying capacitors C_{F1} and C_{F2} are charged in parallel, ideally up to the input voltage V_{IN} (the capacitors have to be the same value). The output capacitor C_{OUT} supplies the load. In transfer phase, the switches S1, S4 and S7 are closed while all others are open and the two flying capacitors are placed in series to the input voltage to supply the load and charge the output capacitor, ideally to the output voltage $V_{OUT} = 3 \cdot V_{IN}$.

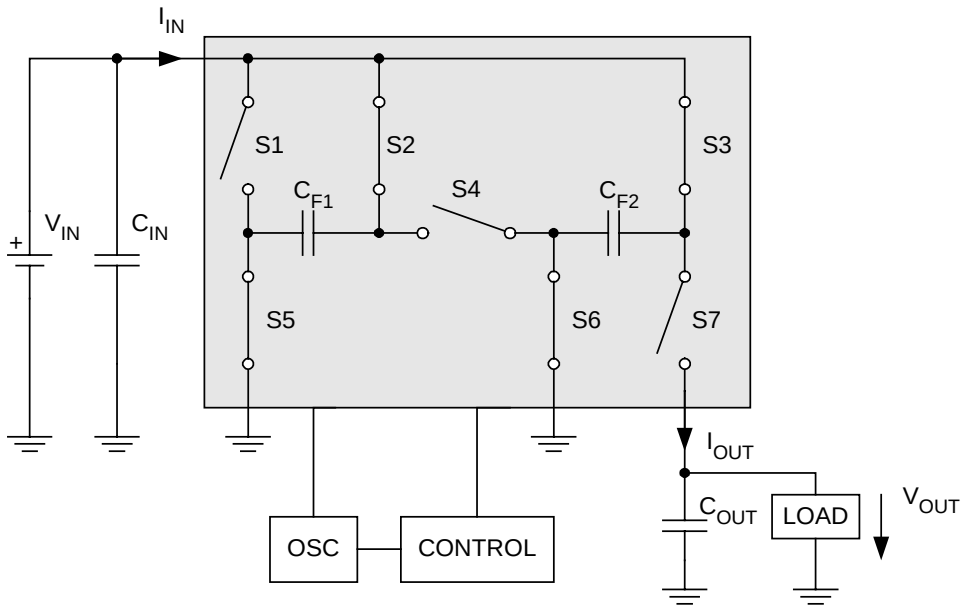

Fig. 4. Voltage tripler.

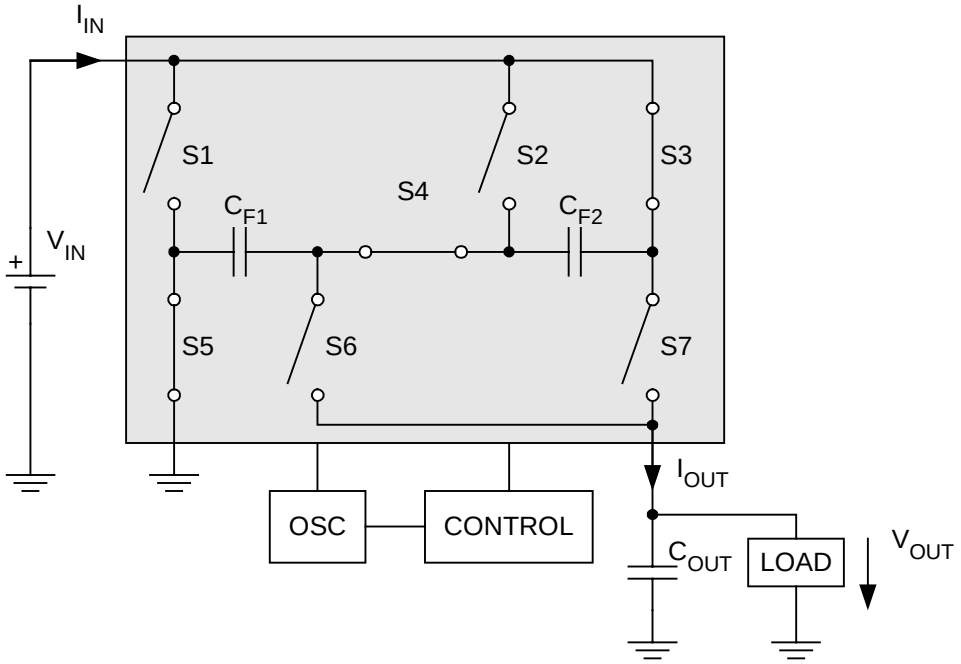

Fig. 5. 1.5-times transfer charge pump.

Fig. 5 shows the topology of a charge pump that operates in 1.5-times transfer. Two phase switching is also applicable to this example. In the charge phase, the switches S3, S4 and S5 are closed and the flying capacitors are charged in series to half the input voltage (the two capacitors have to be the same value). During this phase the load is supplied by the output capacitor C_{OUT}. In the transfer phase, the switches S1, S2, S6 and S7 close and the two flying capacitors C_{Fx} are placed in parallel to each other and in series to the input voltage, therefore the output capacitor C_{OUT} is ideally charged to $V_{OUT} = 1.5 \cdot V_{IN}$.

II. Regulation Schemes

The topologies shown up to now have been unregulated and deliver a multiple of the input voltage. In most applications, this would lead to the need for an additional regulator to regulate the output voltage if the input voltage varies, as with batteries. To overcome this disadvantage newer charge pumps are regulated and deliver a fixed output voltage. There are actually three different ways to regulate a charge pump. Fig. 6 and Table I. give an overview of the different regulation schemes. In Fig. 6A, I represents the average current delivered to the output during one cycle. For the LinSkip method, three different output loads are mentioned to describe the operation of the regulation.

A. Pulse-Skip Regulation

In pulse-skip regulation, the output voltage is held constant by skipping unneeded pulses. As long as the output voltage is below the required value, the charge pump operates and charges the output capacitor. If the output voltage exceeds a certain internally set level, the charge pump stops operation. This reduces the power consumption of the internal circuitry to a minimum. When the output voltage sinks below the minimum output voltage threshold, also set internally, the charge pump starts operation again. The advantage of this regulation is a very low control current, because the charge pump operates only if the output voltage is too low. The disadvantages are the variable frequency and the higher output voltage ripple compared to Constant-Frequency regulation.

Equations 1 and 2 give approximately the output voltage and the ripple of the output voltage for a voltage doubler in Pulse-Skip regulation.

$$V_{OUT} = 2 \cdot V_{IN} - I_{Load} \cdot \left(2 + \frac{\Delta t_W}{\Delta t}\right) \cdot \sum_{i=1}^{4} R_{Si} \quad (1)$$

Δt_W is the time duration in which the charge pump is not operating while Δt is half of the time period the charge pump is operating. The sum of the four R_{Si} is the resistance of the internal switches. In Pulse-Skip regulation, the resistance of the internal switches is set to the minimum and only Δt_W is regulated.

Table I.
Advantages and Disadvantages of the Three Regulation Schemes

Regulation Scheme	Advantages	Disadvantages
Pulse-Skip	Very low quiescent current, thus higher efficiency	Higher output voltage ripple. No fixed frequency.
Constant Frequency	Very low voltage ripple. Fixed frequency	Higher quiescent current
LinSkip	Low output voltage ripple. Low quiescent current.	For very low output currents no fixed frequency.

$$V_{OPP} = \left(\frac{2 \cdot V_{IN} - V_{OUT}}{\sum_{i=1}^{4} R_{Si}} - I_{LOAD}\right) \cdot \left(ESR_{COUT} + \frac{1}{2 \cdot f_{CLK} \cdot C_{OUT}}\right) \quad (2)$$

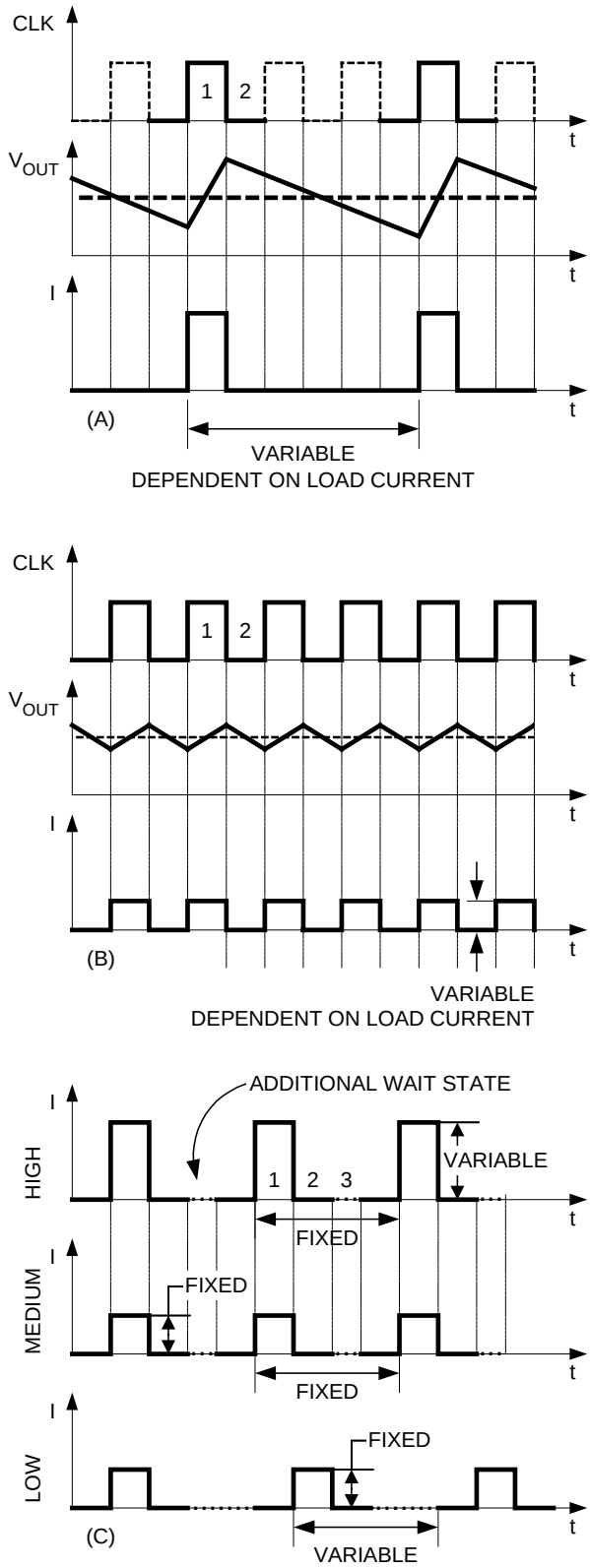

Fig. 6. Different regulation schemes, (A) Pulse-Skip, (B) Constant/Fixed-Frequency and (C) LinSkip.

B. Constant-Frequency Regulation

The Constant-Frequency regulating system regulates the output voltage by changing the resistance of the internal switches. The charge pump operates all the time independent of the output voltage. Regulation is achieved by varying the charge that is transferred per switching cycle. The internal switches and the external capacitors form a RC constant that varies with output voltage. If the output voltage is too high, the control circuitry regulates the resistance of the internal switches in such a way that the time constant increases and the amount of transferred energy per cycle decreases. The advantage of this method is a fixed frequency operation with a very low output voltage ripple that makes filtering easier. The output voltage ripple is lower than in Pulse-Skip regulation, but increases a bit with increasing output current. The higher the output current is, the higher is the charge transferred to the load during the charge phase. Therefore the output capacitor is discharged more than with low output current. The disadvantage of Constant-Frequency regulation is higher supply current. Since the internal circuitry is active as long as the system is active and the switches have to be turned on and off in each cycle, more operating current is necessary than required for Pulse-Skip regulation.

Equations (3) and (4) (next page) show the output voltage and the ripple of the output voltage of a voltage doubler in Constant-Frequency regulation.

$$V_{OUT} = 2 \cdot V_{IN} - I_{LOAD} \cdot 2 \cdot \sum_{i=1}^{4} R_{Si} \qquad (3)$$

C. LinSkip Regulation

The third and newest regulation scheme is called LinSkip regulation. This scheme regulates on current conducted to the output and not like the previous ones on voltage. LinSkip regulation uses 3 phases, charge phase, transfer phase and wait phase. In Phase 3, also called wait state, the charge pump does nothing and all four switches are open. During this phase the output capacitor C_{OUT} supplies the load and the charge on the

flying capacitor C_F stays nearly constant (despite leakage). If the output current is high, the charge pump operates in linear mode, i.e. the wait state is 0 and the current transferred per cycle is regulated dependent on the load current. When the output current demand decreases, the current is fixed and the wait state increases its duration with decreasing load current. Therefore the charge pump now operates in skip mode.

The phases 1 and 2 have equal time duration Δt. Phase 3 has the duration Δt_W. In steady state this means that the charge transferred in the two phases 1 and 2 is equal, and in Phase 3 there is no transfer at all. If the time constant in charge and transfer phase is big enough, the voltage change on the capacitors during charge and discharge is nearly linear. Now, the two equations (5) and (6) for the output voltage V_{OUT} and voltage ripple V_{OPP} for a single-ended voltage doubler can be derived:

For more details on how these equations are obtained, see reference 1.

$$V_{OUT} = 2 \cdot V_{IN} - I_{LOAD} \cdot \left(2 + \frac{\Delta t_W}{\Delta t}\right) \cdot \sum_{i=1}^{4} R_{Si} \quad (5)$$

Equations 1 and 5 are equal. The difference is that the sum of the switch resistances is held constant and as low as possible in Pulse-Skip regulation, and only the wait time is changed. In the LinSkip regulation mode, there are two possibilities for regulating the output voltage to a constant value. The input voltage is variable but cannot be influenced by the control circuitry of the IC in a running system; the load current is also given by the system. The duration for the charge and transfer phase Δt is given by the frequency of the charge pump. Therefore the two variables Δt_W and R_{Si} are influenced by the control circuitry dependent on the actual output current. For high output currents, the duration of the wait state is held constant to zero and changing the resistance of the internal switches R_{Si}, like in Constant-Frequency regulation, regulates the output voltage. Below a certain output current limit, the resistance of the internal switches is fixed and the output voltage is regulated with the duration of the wait state. A lower output current yields to a longer duration of the wait state Δt_W.

D. Efficiency-Optimized Charge Pump

Despite all the different regulation schemes, the efficiency of a simple charge pump is dependent on the input voltage. The lower the input voltage, the higher the efficiency (as long as the input voltage is not too low). To increase the efficiency for higher input voltages, a new topology was invented. This "efficiency-optimized" charge pump can change from one topology to another. Fig. 7 shows the necessary switches and capacitors for implementing this topology.

Nine switches are necessary to build such a charge pump. With these switches it is possible to build a voltage doubler, tripler or operate in 1.5-times transfer. In the TPS6012x charge pumps the voltage tripler possibility is not available and therefore the description is reduced to 1.5-times transfer and voltage doubler. As long as the input voltage is high enough (higher than approximately 2/3 of the output voltage), the charge pump operates in 1.5-times transfer. The flying capacitors are charged by closing the switches C and discharged by closing the switches B. When the input voltage decreases further, the charge pump changes the topology and operates now as a voltage doubler. The flying capacitors are now charged by closing the switches A and discharged as above by closing the switches B.

$$V_{OPP} = I_{LOAD} \cdot \left(2 \cdot ESR_{COUT} + \frac{1}{2 \cdot f_{CLK} \cdot C_{OUT}}\right) \quad (4)$$

$$V_{OPP} = I_{LOAD} \cdot \left[ESR_{COUT} \cdot \left(2 + \frac{\Delta t_W}{\Delta t}\right) + \frac{\Delta t}{C_{OUT}} \cdot \left(1 + \frac{\Delta t_W}{\Delta t}\right)\right] \quad (6)$$

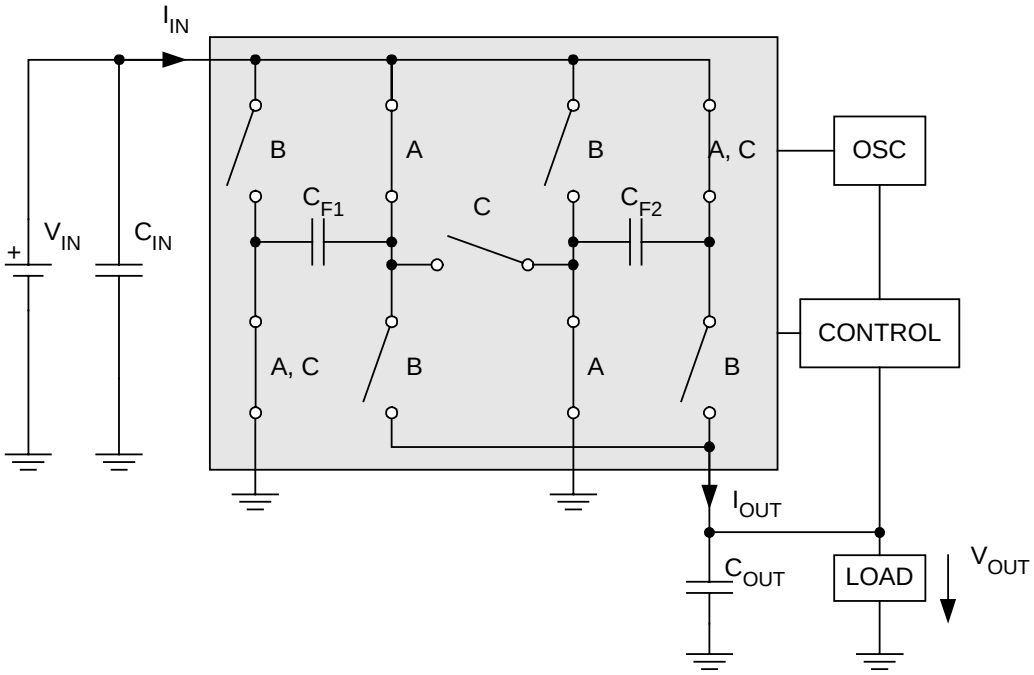

Fig. 7. Efficiency-optimized charge pump.

III. Influence of Capacitor Selection on Output Voltage Ripple

There are two factors important for capacitors used in charge pump applications: the capacitance and the equivalent series resistance (ESR). These two factors differ in their importance and influence by the topology and regulation scheme used in the charge pump, and whether they are used as input, flying or output capacitors. This section discusses this influence in detail, in terms of the topology regulation scheme, starting with Pulse-Skip regulation in a single-ended and push-pull charge pump. Then the capacitor selection in a Constant-Frequency single-ended and push-pull charge pump will be shown, followed by a discussion related to the LinSkip, push-pull charge pump method.

The ESR of a capacitor always influences the transient response of a charge pump. The higher the ESR of the capacitors, the longer is the response time to load changes. The ESR of the input C_{IN} and the flying capacitor(s) C_F reduce the maximum charge that is delivered to the output during one cycle. This leads to more cycles being necessary until the load and the output capacitor voltages return to the nominal value.

The ESR of the output capacitor C_{OUT} impacts directly the voltage drop during a load transient. The voltage drop on the ESR of the output capacitor is linearly dependent on the current drawn by the load. The larger the ESR of the output capacitor is, the larger is the output voltage drop for an increased load demand, and therefore the more energy has to be transferred to the output, resulting in an increased recovery time.

A. Pulse-Skip Regulation

In Pulse-Skip regulation, regardless of whether a single-ended or a push-pull charge pump is used, the influence of the value and the ESR of different capacitor choices are nearly the same. The size of the input capacitor C_{IN} has no influence, as long as it is around 4 to 5 or more times bigger than the flying capacitor(s).

The value of the flying capacitor(s) C_F has direct influence on the output voltage ripple. In Pulse-Skip mode, the minimum number of pulses is one, and the duration of the pulse is fixed. Therefore the higher the capacitance of the flying capacitor(s), the greater the amount of energy given to the output of the charge pump. The more energy delivered to the output, the higher the voltage change on the output capacitor and so the

output voltage ripple amplitude. The frequency of the ripple is reduced with a higher value of C_F because the load needs more time to discharge the output capacitor to the lower threshold.

In Pulse-Skip mode, toggles the output voltage between two levels, therefore the output voltage ripple has a minimum value given by the difference between these two levels. The charge pump operates when the voltage is below the upper level and stops operation as long as the output voltage is above the lower level. Therefore the minimum output voltage ripple is given by the design of the charge pump because these two thresholds are internally defined. The ESR of the output and flying capacitor add additional amount of ripple voltage to the inherent minimum ripple.

The size of the output capacitor C_{OUT} also influences the output voltage ripple, but this influence is minimized since the charge pump design has established minimum voltage ripple as described above. Now as long as the output capacitor is large as compared to the flying capacitor, by approximately 8 to 10 times, the upper voltage level is normally reached with one cycle. The ripple is given dependent on the size of the flying capacitor compared to the size of the output capacitor. If the capacitance of the output capacitor increases, the voltage ripple becomes lower. The charge pump has to pump several times until the upper level is reached and therefore the ripple is now given by design.

Despite the increased time for a transient response, the ESR of the different capacitors influences the operation of a charge pump in Pulse-Skip regulation as follows.

The ESR of the input capacitor C_{IN} and the flying capacitor(s) C_F increase the number of necessary pulses to maintain the output voltage. This leads to additional pulses and lowers the efficiency of the charge pump. The ESR of the flying capacitor(s) has a bigger impact than the ESR of the input capacitor. With low input voltages and high ESR flying capacitors, the output voltage can no longer be maintained because not enough energy can be transferred to the output. Therefore the ESR of the flying capacitors has to be minimized and only ceramic capacitors with X7R or X5R material should be used for the flying capacitors.

The ESR of the output capacitor C_{OUT} can be seen on the output voltage waveform of the charge pump. The voltage swings during each switching cycle increase proportional to a higher ESR. This originates from charging and discharging the output cap in each cycle. The change in current flow changes the direction of the voltage drop at the output capacitor. Therefore at the beginning of a charge cycle, a positive voltage change will happen and vice versa at the beginning of the discharge cycle. This reduces the efficiency of the charge pump because of the need for more pulses per second.

Tantalum capacitors may be used as input and output capacitors if the influence of the higher ESR — longer transient response and higher output voltage ripple — is not a concern.

B. Constant-Frequency Regulation

A push-pull charge pump transfers charge continuously from the input to the output. Therefore the value of the caps is negligible as long as the minimum requirements given in the datasheet are fulfilled. In a single-ended charge pump, the size of the flying capacitor C_F and the output capacitor C_{OUT} determine the output voltage ripple. Increasing the flying capacitor increases the ripple because more charge is given to the output per cycle. Selecting an output capacitor with a larger value reduces the output voltage ripple because during the charge cycle the capacitor is less discharged. The input capacitor C_{IN} only maintains the low impedance of the source and therefore increasing the capacitance of this capacitor has no influence upon the output voltage.

The ESR of the input capacitor C_{IN} has no influence on the functionality of the charge pump as long as a low impedance input is maintained. The problem in this case is that the capacitor is under current stress and will be heated as a function of the ESR. Either ceramic or tantalum capacitors should be used as input capacitors.

The ESR of the flying capacitor(s) C_F has no influence as long as the input voltage is high enough. Since the output voltage level is maintained by changing the resistance of the

internal switches, the efficiency does not change with higher ESR. The power dissipation is now partly moved from the internal switches to the flying capacitors. If the input voltage is decreased to a value near the minimum voltage, the charge pump is no longer able to maintain the output voltage because of the higher power dissipation in the flying capacitors. Therefore, as with charge pumps in Pulse-Skip regulation, only ceramic capacitors are recommended for the flying capacitors.

The ESR of the output capacitor C_{OUT} will lead to voltage ripple on the output voltage. Fig. 8 shows an example with tantalum capacitors and ceramic capacitors at the input and output. The tantalum capacitors are low ESR capacitors that have only several tenth of milliohm of ESR, but even this is a lot higher than in ceramic capacitors. It can be seen that with tantalum capacitors the ripple is increased. In a single-ended charge pump the ESR leads to a voltage drop (positive or negative) during the turnover from one phase to the other. Thus the charge and discharge of the output capacitor happens with the RC time-constant given by the ESR and the capacitance. In the push-pull charge pump the ESR leads to a voltage drop during turn-over from the transfer phase of one charge pump to that of the other one. The ESR of the output capacitor increases the output voltage spikes and reduces the efficiency by some percent. If the ESR is higher than several ohms, e.g. in some aluminum capacitors, the output voltage can no longer be maintained by the charge pump. Therefore only ceramic or tantalum capacitors are recommended for output capacitors.

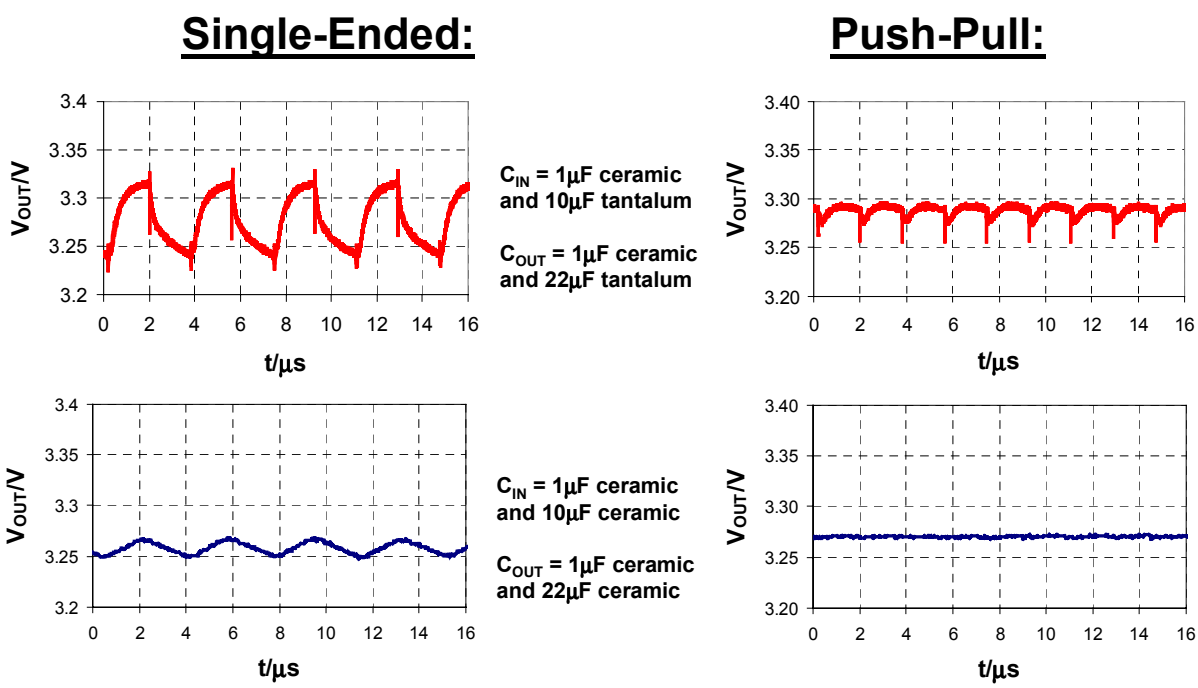

Fig. 8. Comparison of single-ended with push-pull charge pump and influence of the ESR of the input and output capacitors, C_{Fx} = 2.2µF ceramic, measured on TPS60100.

C. LinSkip Regulation

Charge pumps operating in LinSkip mode are most of the time in a Constant-Frequency or linear regulation. Only at low output currents the charge pump switches to skip mode. The regulation-scheme is based on current control. In this case the charge pump IC regulates the current transferred to the output as long as the charge pump is in the linear mode. Therefore the size of the different capacitors has no influence as long as the minimum requirements specified in the datasheet are fulfilled.

With this new regulation scheme, the influence of the ESR is minimized. In linear operation the ESR has a similar influence as in a push-pull charge pump in Constant-Frequency regulation. And in skip operation are the same problems observed as described in Section III. A: *Pulse-Skip Regulation*.. Since Pulse-Skip operation is only used for low load currents the problems are therefore reduced. Thus the size of the capacitors is minimized in this regulation scheme, ceramic capacitors can be used for input, flying and output capacitors. Tantalum capacitors have no longer a significant advantage in size or cost. For example, TPS60200 needs 2.2µF input and output capacitors and 1µF flying capacitors to supply an output current of 100mA.

In general the best capacitors for charge pumps are ceramic capacitors with X7R or X5R material. In some cases tantalum capacitors have a size or cost advantage but then the disadvantages must also be kept in mind. Since LinSkip regulation mode is a current regulation, this scheme will become more popular in the future. Its benefits are reduced capacitor size and a lower impact of the capacitor's ESR.

IV. Application Examples

A. Reducing Spikes

If there is the need to further decrease the switching spikes of a push pull charge pump, then an additional LC filter can be added to the output as shown in Fig. 9. Fig. 10 shows the output voltage of the TPS60100 without filter and Fig. 11 with the implemented LC filter. Adding the filter reduces the spikes from 18mV down to 6mV. All measurements were taken with a load resistance of R_L = 16.5Ω to draw the maximum output current of 200mA.

FB is connected to the filter output to avoid that the spikes before the LC filter enter the error amplifier and the series resistance of the inductor influences the regulation of the output voltage. The filter corner frequency of 2.3MHz was chosen well above the 300kHz switching frequency to avoid loop stability issues.

Fig. 11 shows the same amount of AC output ripple, however the spikes have been reduced down to 6mV.

Be aware that the energy dissipated in the series resistance of the inductor has to be delivered by the charge pump. Therefore with low input voltages and high output currents, the output voltage may exceed the limits given in the datasheet, either in output voltage or in temperature.

The part numbers for the capacitors and the inductor are given in the Table II.

B. Additional Negative Output

Some applications like biasing a LC-display require in addition to the main positive supply voltage also a negative voltage at low current. The power supply circuit should be able to easily obtain this additional negative supply voltage. Fig. 12 shows how to derive a negative voltage from a charge pump by adding a few external parts. The negative voltage is stabilized with a shunt regulator. The regulated negative output can be adjusted from $-V_{REF}$ to -3V, where V_{REF} is 1.24V typical.

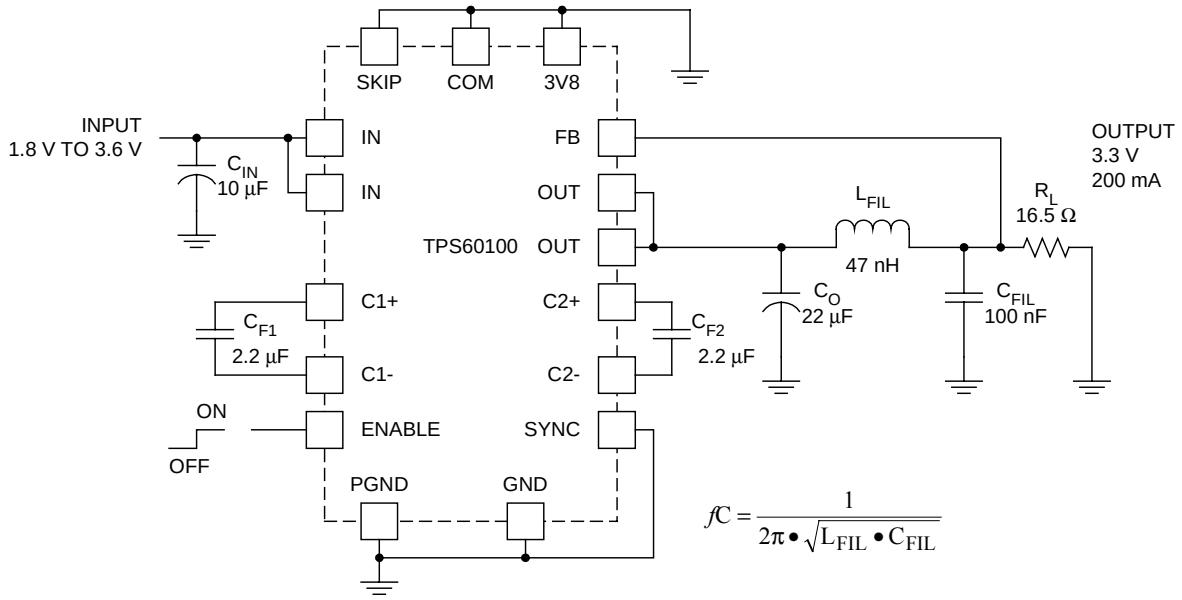

Fig. 9. Output LC filter reduces spikes and output ripples to an absolute minimum.

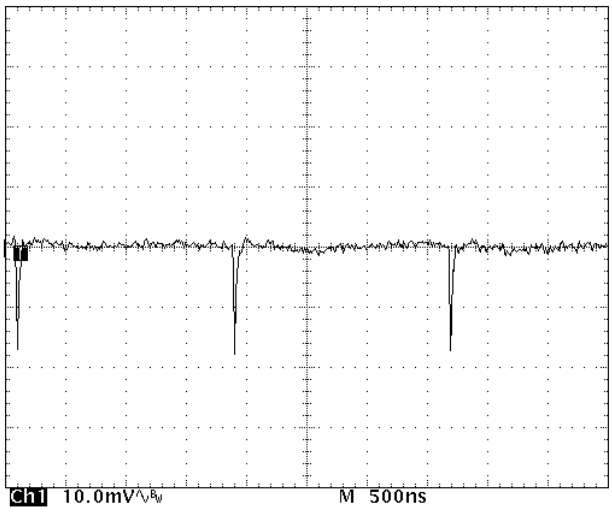

Fig. 10. Output ripple without LC filter.

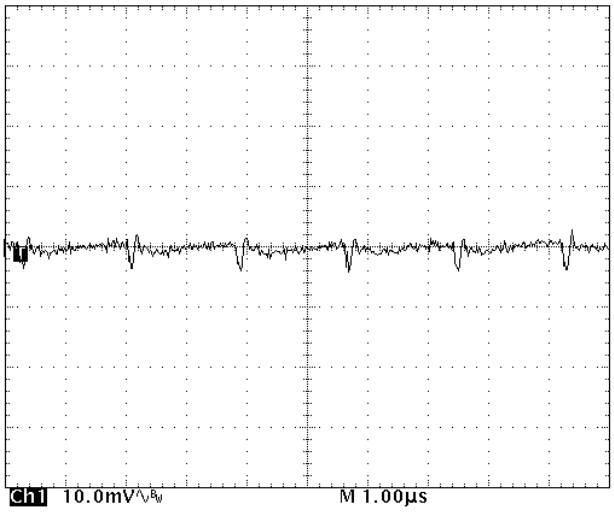

Fig. 11. Output ripple with LC filter.

TABLE II.
PART NUMBERS FOR CHARGE PUMP TPS60100 WITH LC FILTER

Part	Value	Part Number	Manufacturer
C_{IN}	10µF, 16V	EMK325F106ZF (F/Y5V)	Taiyo Yuden
C_{1F}, C_{2F}	2.2µF, 16V	LMK212BJ225MG-T (BJ/X7R)	Taiyo Yuden
C_O	22µF, 10V	LMK316F226ZL (F/Y5V)	Taiyo Yuden
L_{FIL}	47nH, 0.075Ω	1008G470GTE	Stetco
C_{FIL}	100nF, 16V	EMK107BJ104AA (BJ/X7R)	Taiyo Yuden

Inductive DC/DC converters can easily generate several voltages by additional windings to the inductor. Charge pumps do not allow this approach. The proposed solution uses the voltage ripple at the flying capacitor C_{Fx} to generate a negative voltage at low current. Of course, the voltage ripple is very low as well as strongly dependent on input voltage and output current of the main output. Therefore it is necessary to first multiply this ripple voltage with a cascade (voltage inverter plus doubler) and then stabilize it with the TLV431 shunt regulator. An advantage of this solution is that the negative voltage can easily be adjusted to another voltage level. The circuit has been tested with all TPS601xx devices. The TPS6010x and TPS6011x-devices has to run in skip mode to ensure an appropriate voltage ripple at C_{Fx}, hence SKIP is connected to V_{IN}.

Fig. 12 shows the application, which consists of the TPS601xx charge pump, a cascade and the 3-terminal adjustable shunt regulator TLV431. Due to the low ripple and in order to minimize losses, Schottky diodes are used for the cascade that inverts the input voltage and doubles it. To increase the ripple voltage amplitude at the input of the cascade, small 1Ω resistors have been added in series with the flying capacitors.

V_I is the voltage after the cascade in front of the 47Ω resistor. The negative output voltage V_O is determined by the resistor network R1 / R2 as follows:

$$V_O = -\left(1 + \frac{R_1}{R_2}\right) \cdot V_{REF} - R_1 \cdot I_{I(REF)} \qquad (7)$$

where V_{REF} is typically 1.24V. $I_{I(REF)}$ is the reference input current, which is typically about 0.15µA.

The resistor R should provide a cathode current $|I_{KA,min}| \geq 0.08$mA to the TLV431 at minimum V_I.

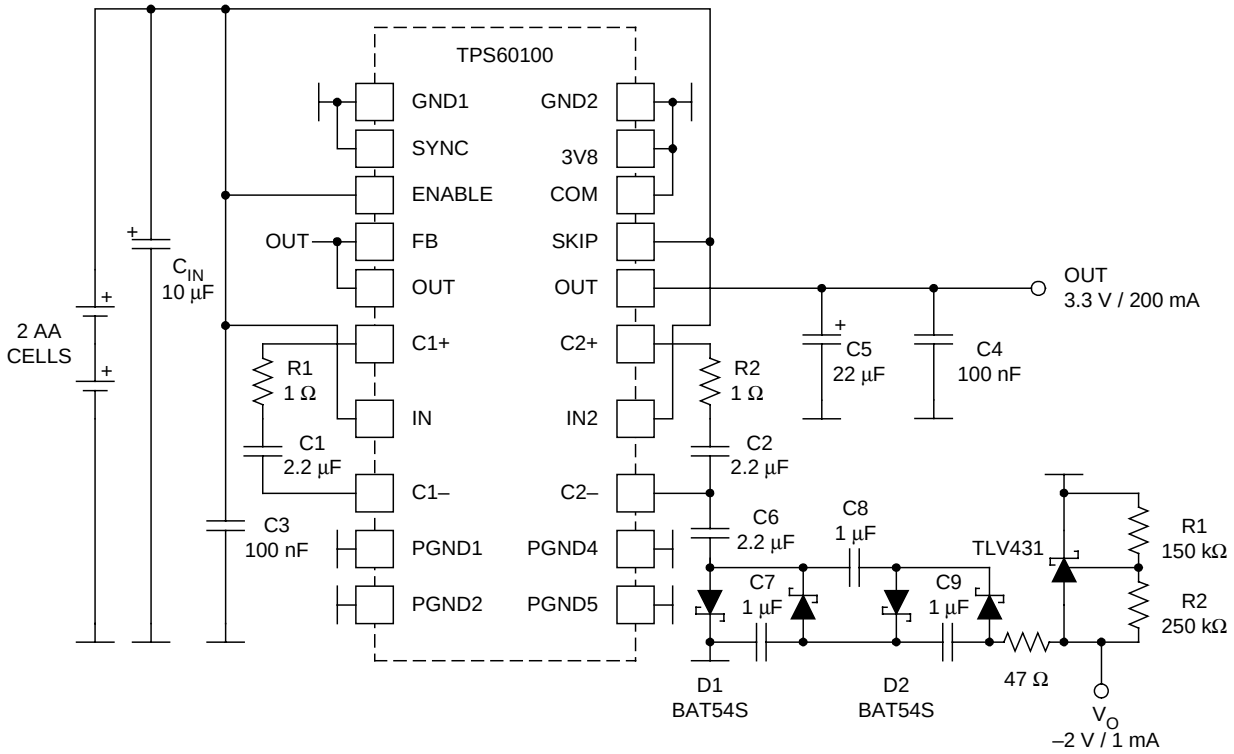

Fig. 12. Additional negative output with TPS601xx.

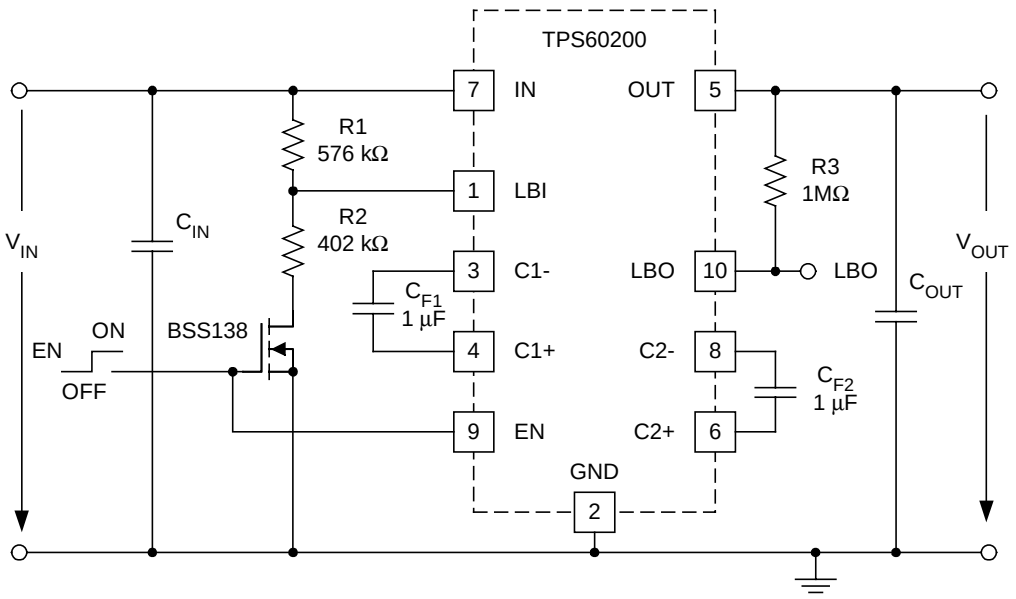

Fig. 13. Additional transistor reduces supply current.

1. Application hints

- For best performance connect the input of the cascade with C1- (PIN 8) when using the TPS60140
- Use low voltage Schottky diodes for the cascade, – e.g. BAT54S (double diode), LL103A, MBRM120LT3 (for highest performance)
- R in series with C_{Fx} must be at maximum resistance at (worst case)
  - Maximum input voltage of the charge pump
  - Minimum output current at the main output
  - Maximum output current at the negative output
- In some applications using the TPS6012x, TPS6013x and TPS6014x the series resistor with C_{Fx} may not be necessary
- The resistor in series with C_{Fx} will limit the maximum current at the main output of the charge pump at low input voltages, but will increase the performance of the negative voltage. Use lowest value sufficient for the application

Since the charge pump generates a regulated output voltage, the resistors in series with C_{Fx} will not degrade the efficiency of the inverter within a wide operating range.

C. Reducing Quiescent Current

In many battery-powered systems, the quiescent current of the system is very important. Such systems are most of the time in a wait or shutdown mode and operate only during a short time. Afterwards the system returns into the shutdown mode for a longer period of time. A reduction of several microAmps of quiescent current could increase battery lifetime significantly.

Another requirement in a battery driven system is battery voltage supervision to tell the user when it's time to change or recharge the battery. Additionally when using rechargeable batteries, the supervision is also necessary to prevent the batteries from over-discharge. For the measurement of the battery voltage, often a resistive divider in parallel to the battery is used. This resistive divider has to be high impedance in order to minimize power dissipation. On the other hand, it needs to be low enough to prevent noise interference. Commonly a resistive divider with some megaOhms is used. If, for example, a resistive divider with a resistance of 1MΩ is used, a constant current of 1µA per volt battery voltage flows through the resistive divider.

Fig. 13 shows how to reduce this current to less than 10nA, when using a charge pump like TPS60200. Here the system voltage is regulated to 3.3V. If the system enters the shutdown mode

and the TPS60200 is disabled (EN = 0), the transistor BSS138 disconnects the resistive divider from the battery. The TPS60200 consumes in shutdown mode only a few nanoAmps. This means that the supply current in shutdown mode is reduced from 2.4µA to some nanoAmps when 2 battery cells in series are used (nominal cell voltage 1.2V).

The transistor BSS138 was used because this transistor can also be enabled with the lowest battery voltage. Since the resistive divider has a resistance of around 1MΩ, the measurement in active mode is not influenced by the on-resistance of the transistor. With 1.8V to enable the system, the on-resistance of the transistor is low enough to be neglected. Different temperatures also didn't impact the accuracy of the voltage measurement of the battery voltage.

The influence of the quiescent current increases with the standby time of the system and with decreasing current consumption during operation.

REFERENCES

[1] Erich Bayer, Hans Schmeller, *"Charge Pump with ACTIVE CYCLE Regulation — Closing the Gap Between Linear- and Skip Modes"*, in PCIM 2000, Dublin, Ireland

[2] Brigitte Kormann, Jim Pelfrey, *"Simple Design of an Ultra-Low-Ripple DC/DC Boost Converter with TPS60100 Charge Pump"*, Analog Applications Journal, May 2000, Texas Instruments Literature No. SLYT015, pp. 15-18

[3] Brigitte Kormann, *"TPS6010x/TPS6011x Charge Pump"*, Application Report, 1999, Texas Instruments Literature No. SLVA070A

[4] Thomas Schäffner, *"Additional Negative Output with TPS601xx"*, Design Idea Page, 2000, Texas Instruments Literature No. SLVA098

IMPORTANT NOTICE

Texas Instruments Incorporated and its subsidiaries (TI) reserve the right to make corrections, modifications, enhancements, improvements, and other changes to its products and services at any time and to discontinue any product or service without notice. Customers should obtain the latest relevant information before placing orders and should verify that such information is current and complete. All products are sold subject to TI's terms and conditions of sale supplied at the time of order acknowledgment.

TI warrants performance of its hardware products to the specifications applicable at the time of sale in accordance with TI's standard warranty. Testing and other quality control techniques are used to the extent TI deems necessary to support this warranty. Except where mandated by government requirements, testing of all parameters of each product is not necessarily performed.

TI assumes no liability for applications assistance or customer product design. Customers are responsible for their products and applications using TI components. To minimize the risks associated with customer products and applications, customers should provide adequate design and operating safeguards.

TI does not warrant or represent that any license, either express or implied, is granted under any TI patent right, copyright, mask work right, or other TI intellectual property right relating to any combination, machine, or process in which TI products or services are used. Information published by TI regarding third–party products or services does not constitute a license from TI to use such products or services or a warranty or endorsement thereof. Use of such information may require a license from a third party under the patents or other intellectual property of the third party, or a license from TI under the patents or other intellectual property of TI.

Reproduction of information in TI data books or data sheets is permissible only if reproduction is without alteration and is accompanied by all associated warranties, conditions, limitations, and notices. Reproduction of this information with alteration is an unfair and deceptive business practice. TI is not responsible or liable for such altered documentation.

Resale of TI products or services with statements different from or beyond the parameters stated by TI for that product or service voids all express and any implied warranties for the associated TI product or service and is an unfair and deceptive business practice. TI is not responsible or liable for any such statements.

Mailing Address:

Texas Instruments
Post Office Box 655303
Dallas, Texas 75265

Copyright © 2002, Texas Instruments Incorporated