Product Bulletin

TNETV2020™ Enterprise VoIP Gateway Solution

Telogy Software™ products integrated with TI's DSP Based Access Communication Processor

Texas Instruments TNETV2020 Enterprise VoIP Gateway Solution integrates Telogy Software™ products with TI's DSP-based access communications processor to provide a scalable and cost competitive single chip solution for integrated access devices (IAD) and gateways for enterprise applications. TI's Enterprise VoIP Solution supports up to T1/E1-based gateways.

Telogy Software products provide a wide range of voice/fax processing, signaling and network protocol features tailored for enterprise applications.

The TNETV2020 access communication processor includes the highest level of integration of DSP and RISC processors, memory and common system functions and system interfaces. Key features include two DSP cores, RISC processor, memory, DES/3DES encryption, two 10/100 Ethernet MACs, PCI and USB.

Toll Quality Voice
True toll quality is achieved through a full implementation of voice features that include echo cancellation, voice packet playout software, tone processing, voice activity detection with comfort noise generation and the use of low bit rate voice codecs for bandwidth reduction. These features enable VoIP telephony to meet or exceed quality levels expected in modern telephony systems.

Telogy Software Products
Telogy Software capabilities include:

- Voice over IP
- Fax Relay
- Signaling
- Network Management

Voice
Voice over IP (VoIP) software processes voice samples for transmission over a data network. There are many functions that comprise good quality Voice over IP software. Its sub-components perform echo cancellation, voice compression (to conserve bandwidth), voice-activity detection, jitter removal and voice packetization. Voice features supported include:

- Voice Codec Support: including G.711 (PCM), G.723.1A, G.726 (ADPCM), G.729AB
- Line Echo Cancellation: G.165/G.168-2000
- Voice Activity Detection (VAD) & Comfort Noise Generation (CNG)
- Packet Play-Out: delay, jitter, and lost packet compensation
- In-band tone detection and generation
- Packet Encapsulation: RTP (TCP/IP)

Fax Relay
Fax relay provides reliable real-time fax service between two analog fax machines over a packet network. The

Key Benefits

- Highly integrated solutions
  - Low power
  - High level of integration that includes DSP & RISC resources, memory and system functions & interfaces
- Field proven software with emphasis on QOS, interoperability, and remote monitoring
- Most comprehensive range of features
- Largest installed base of solutions
- Industry leader in DSP
  - Committed roadmap support
  - Code compatibility
  - Process technology
  - Production facilities
- World class technical support
- Industry leader in indemnification with broad patent portfolio

equipment at both ends of the packet network spoofs the analog fax machines such that they operate as if directly connected over a PSTN connection.

The equipment performing fax relay functions must handle the effects of network delay, jitter (variable delay), and lost packets while preventing the fax machines from timing out.

Standard protocols such as T.38 exist for interoperability between equipment vendors. Proprietary techniques are used to improve the interoperability between different fax machines that are subjected to long delay and other packet-network effects.

Fax relay, as part of this gateway solution, is T.38 compliant. In addition, forward error correction and advanced error concealment techniques are employed to improve document quality.

Fax relay consists of the following functions:

- Fax Modem Pumps: V.17, V.29, V.27ter, V.21
- Fax Relay Protocols: T.38 (TCP/IP)
- Fax Machine Spoofing Protocols: Proprietary

Signaling

Gateway platforms must support signaling for call establishment, in-band signaling, and call termination. Both Channel Associated Signaling (CAS) and Common Channel Signaling (CCS) are employed by networks and must be supported.

The following signaling functions are supported and run on a combination of the DSP and RISC processor:

- Tone Detection and Generation, e.g., DTMF, MF, Call Progress, etc.
- Caller ID Detection and Generation
- Message based signaling support, e.g., transparent, HDLC, ISDN, etc.

Network Management

Fundamental to any communications system is the ability to discover, isolate and remedy problems as quickly as possible to minimize or eliminate the degree to which users are impacted.

Telogy Software products provide APIs that enable a gateway system provider to develop network management applications. Telogy Software products APIs can be mapped to standard MIBs and include the following functions:

- Configuration on per channel basis including set-able country code specific information
- Per channel Statistics and Status reporting
- Per channel real-time trace and diagnostics capabilities

Telogy Software Products Architecture

Figure 1 describes the software architecture for gateway solutions. Each box represents a software component required to implement the features for voice, fax,signaling, and network management functions.

Multiple instances of each software component can exist to facilitate support of concurrent, multi-channel operation. Each instance shares common program memory and has unique channel specific data memory to maintain information regarding the state of the channel including network management and diagnostic information.

Access Communication Processor Evaluation Platform

TI provides an evaluation platforms (a hardware implementation of the design) that can be used for solution demonstration, feature and performance evaluation, and system software development and testing.

Indemnification

A standards based industry such as VoIP creates considerable risk and pitfalls surrounding potential third party intellectual property infringement. TI is uniquely positioned to protect customers from claims due to our strong patent portfolio, key cross licenses with major industry players, direct licenses and a wealth of experience in patent litigation and licensing.

TNETV2020 Architecture

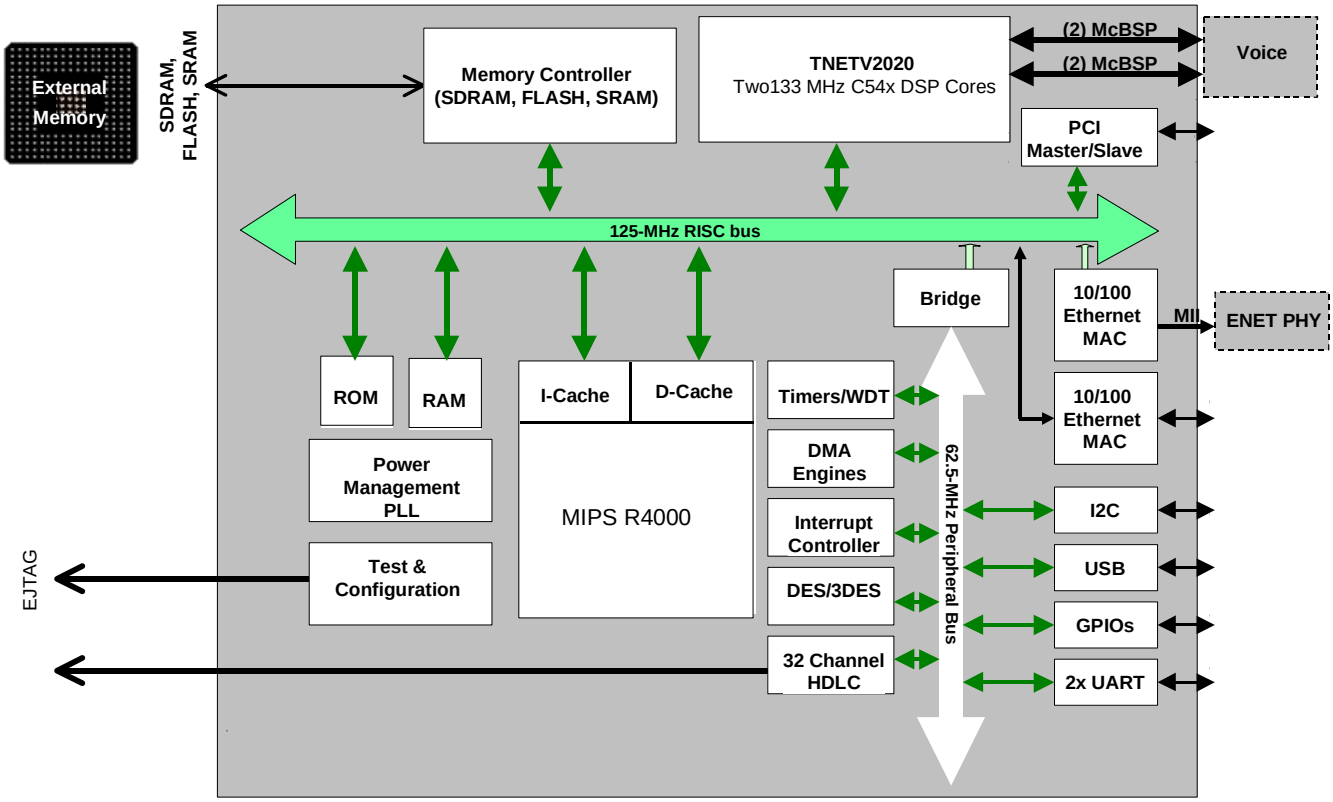

Cores	Two C54x DSP cores
Memory	On-chip SRAM
RISC processor	R-4000 MIPS microprocessor
Memory	On-chip SRAM
Peripherals	USB PCI Two 10/100 Mbps IEEE 802.3 Ethernet MACs
Firewall security	DES/3DES 56bit & 40bit encryption H/W assist
Package	27x27m^2, 388 pin PBGA
Operational Temperature Range	0°C to 85°C
Storage Temperature Range	-55°C to 150°C

Figure 1: Telogy Software Products Architecture

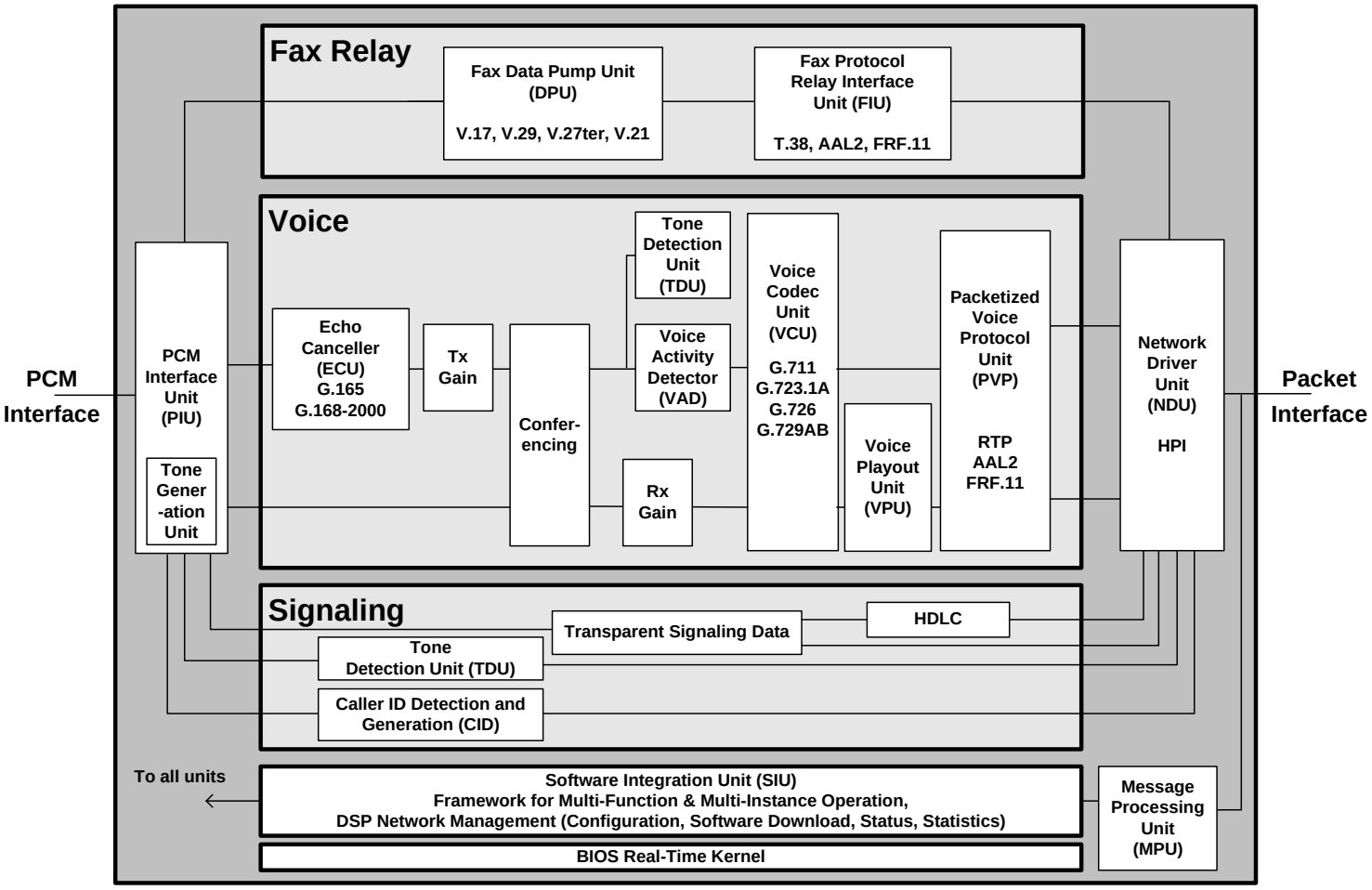

Features: Telogy Software Products for SME Gateway Solutions

Voice and Fax Protocols
G.711 PCM 64 Kbps
G.723.1 5.3/6.3 Kbps and Annex A (silence compression)
G.726 ADPCM 16,24,32,40 Kbps
G.729 AB 8Kbps (Annex A and B – VAD, CNG)
G.165/G.168-2000 echo cancellation
Packet Playout Unit (de-jitter buffer, lost packet compensation)
Voice Activity Detection (VAD) silence suppression
Comfort Noise Generation (CNG)
Comfort noise level control
RTP packet encapsulation for voice
Auto-switch from G.7xx to G.711 upon Fax or modem detection
Configurable voice packetization rates
Fax protocols
V.17 at 7200, 9600, 12,000 & 14,000 bps
V.27ter at 2400 & 4800 bps
V.29 at 7200 & 9600 bps
Fax Pass-Through (PCM)
T.38 real time Fax Relay
In-band signaling
Tone Detection and Generation
DTMF Relay
DTMF detection during voice mode
Configurable call progress detection parameters
DTMF generation/ detection
Management Services/Other
API support (management, event monitoring/reporting, statistics)
Loopback test capabilities
Core dump facility
Memory read/write support
Trace messages

Telogy Software is a trademark of Texas Instruments
For more information please contact your TI sales representative or call 301-515-8580.
www.ti.com
www.telogy.com