Product Brief

BRF6100 Bluetooth™ Single Chip From Texas Instruments

The BRF6100 is a highly integrated CMOS Bluetooth™ single-chip forming a complete Bluetooth wireless communications unit.

The BRF6100 single-chip Bluetooth™ solution integrates the Bluetooth Baseband, RF, Memory (ROM & RAM), Power Management on one chip to enhance performance, reduce cost and minimize board space.

The BRF6100 is the first iteration of digital Radio Frequency (RF) , a revolution in RF technology offering considerable advantages over existing analog RF. These include reduced susceptibility to process variations, increased scalability, improved yield, lower power consumption and ease of integration of both Baseband and RF and ultimately lower cost.

The BRF6100 Single-Chip is ideally suited for low cost, high volume applications such as mobile handheld devices where performance and space are critical.

The advance architecture leverages the TI 0.13u cutting edge digital CMOS process while taking advantages of the unique high performance process properties for RF digital processing.

BRF6100 Single-Chip Feature Highlight

- Process: 0.13u CMOS
- 25mA peak current consumption
- Integrated RF Switch
- Support 13, 15.36, 16.8, 19.2, 19.44, 19.8, 26, 38.44 (MHz)
- Full throughput from all cellular clocks (723.2K bps in DH5)
- Configurable UART to meet all PC UART rates with cellular clocks
- Sensitivity: -85dBm (0.1% BER)
- 1.7-3.6 supply voltage
- Power management on chip
- -40:+85ºC operating temperature
- Up to seven active slaves, One voice channel
- 25micro amps deep sleep current
- RF BIST (Built In Self Test)

The high level of integration allow the solution form factor to drop below 90mm2 this is achieved through the integration of the power management, PLL, loop filter, antenna switch, filters and other analog functions that use to be external to the Bluetooth chip

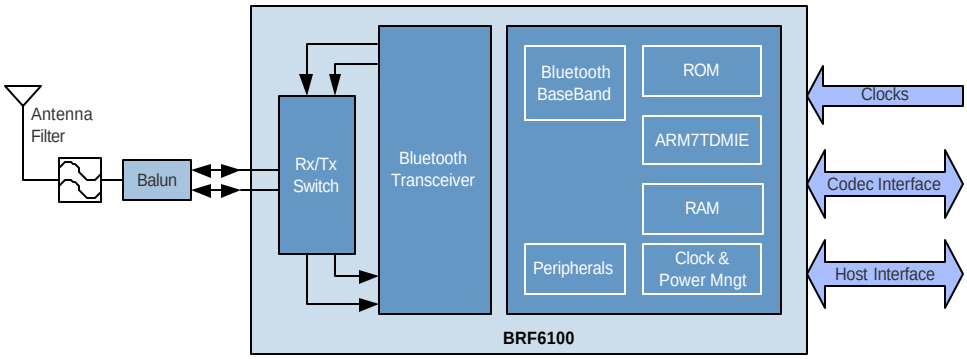

TI RF CMOS.

Digital RF Processing Technology.

The transceiver consists of novel architecture designed explicitly for RF implementation over advanced CMOS process. TI has largely removed the problems associated with analog RF architecture by developing an RF block that is over 90% digital. Using RFCMOS technology, the digital RF is scalable with each new manufacturing process, meaning that both the RF and Baseband portion can benefit from reduced die area with each process node shift, unlike existing analog RF architecture. Digital RF can be re-targeted from process to process with standard digital design tools simplifying design and reducing time to market. A Digital RF is also less prone to process change and variability. These advantages bring considerable cost advantages, enabling continued cost reductions as processes evolve and facilitating faster time to market for new products.

By using RFCMOS technology, both the Baseband and the digital RF are highly scalable and can be integrated into other wireless products over time, including a range of integrated cellular silicon and software solutions .

The BRF6100 has been tailored to suit the key requirements of cellular in terms of power, components, area and solution cost. Primarily targeted at the cellular phone market, the BRF6100 presents considerable savings in terms of board space and overall system cost.

1x1 cm

Typical GPRS Applications: BRF6100 Interconnect with GSM/GPRS chipset.